NOTE:

OVERALL SHIPPING DIMENSION: 8'-2" L X 6'-2" W X 5'-7" H

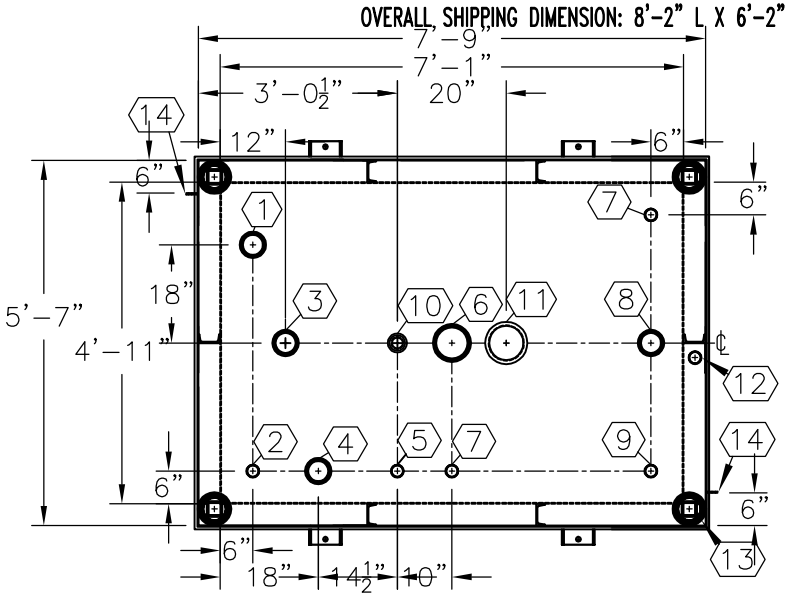

TOP VIEW

ITEM	SIZE	SUGGESTED FUNCTION
1	4"	PHASE 1 VAPOR RECOVERY/SPARE
2	2"	MECHANICAL GAUGE
3	4"	FILL
4	4"	ELECTRONIC LEVEL GAUGE
5	2"	PRIMARY WORKING VENT
6	6"	PRIMARY TANK EMERGENCY VENT
7	2"	SPARE
8	4"	SUBMERSIBLE PUMP
9	2"	SUCTION PUMP/SPARE
10	2"	SECONDARY WORKING VENT
11	6"	SECONDARY CONTAINMENT EMERGENCY VENT
12	2"	SECONDARY MONITOR PIPE
13	4"	FIRE RATED MATERIAL FILL
14	2" X 2"	GROUND CLIP, DWG."MCB004"

TANK SPECIFICATIONS

VENTING CAPACITY: PRIMARY TANK - 147,000 CUBIC FEET PER HOUR
SECONDARY TANK - 190,000 CUBIC FEET PER HOUR

MATERIAL: PRIMARY TANK - 3/16" THICK
SECONDARY TANK - 3/16" THICK

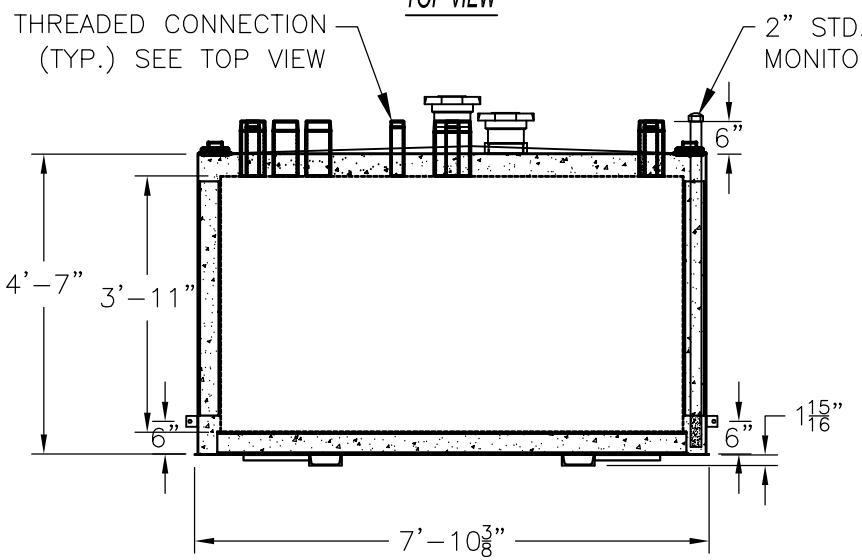

ELEVATION

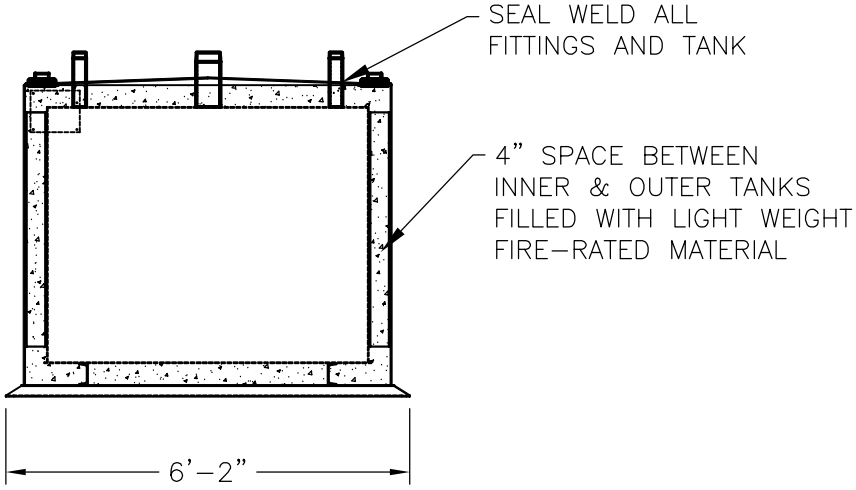

END VIEW

PRODUCT CODE	GALLONS	DESCRIPTION	OVERALL SIZE	SHIP WT.
V4AA101MVS000	1,000	U/L-2085 ABOVE GROUND VAULT TANK	7'-9" L X 5'-7" W X 4'-9" H	8,500 LBS.

THIS DRAWING AND DESIGN SHOWN HEREIN IS THE PROPERTY OF CONTAINMENT SOLUTIONS. USE OR COPIES THEREOF CANNOT BE MADE WITHOUT WRITTEN CONSENT.

CUSTOMER NAME

APPROVED BY: _____ DATE: _____

CONTAINMENT SOLUTIONS®

DRAWN BY: D. ROVANG	DATE DRAWN: 01-01-14
DWG NUMBER: 5100017	SCALE: 1:36
REV: REV BY: DATE:	SHEET: 1 OF 1