NOTE:
OVERALL SHIPPING DIMENSION: 20'-8" L X 8'-6" W X 8'-5" H

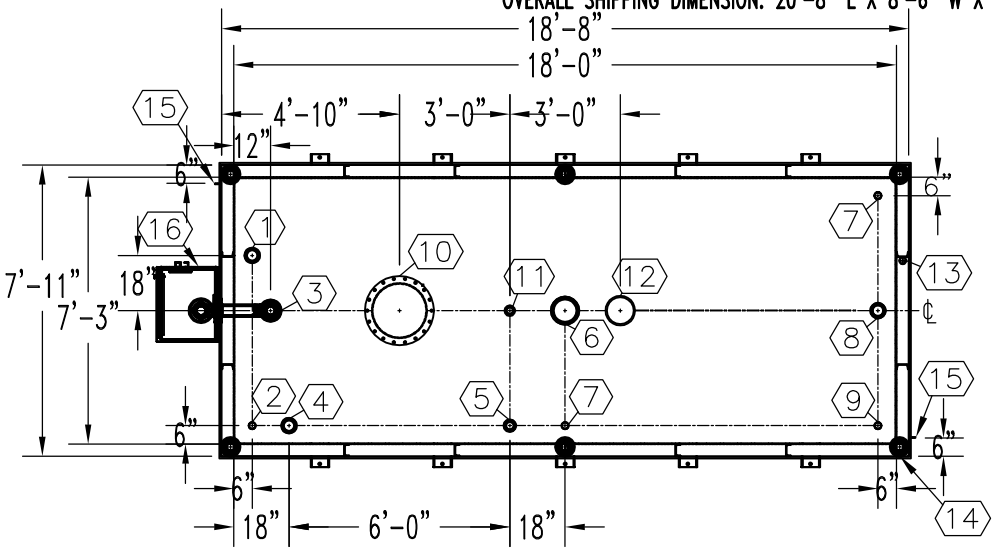

TOP VIEW

ITEM	SIZE	SUGGESTED FUNCTION
1	4"	PHASE 1 VAPOR RECOVERY/SPARE
2	2"	MECHANICAL GAUGE
3	6"	FILL
4	4"	ELECTRONIC LEVEL GAUGE
5	3"	PRIMARY WORKING VENT
6	8"	PRIMARY TANK EMERGENCY VENT
7	2"	SPARE
8	4"	SUBMERSIBLE PUMP
9	2"	SUCTION PUMP/SPARE
10	18"	ABOVE LIQUID MANHOLE, DWG."MHB001"
11	2"	SECONDARY WORKING VENT
12	8"	SECONDARY CONTAINMENT EMERGENCY VENT
13	2"	SECONDARY MONITOR PIPE
14	4"	FIRE RATED MATERIAL FILL
15	2" X 2"	GROUND CLIP, DWG."MCB004"
16	3" PIPE	MORRISON 3QBB REMOTE FILL BOX, DWG."SBB202"

TANK SPECIFICATIONS

VENTING CAPACITY: PRIMARY TANK - 354,000 CUBIC FEET PER HOUR
SECONDARY TANK - 392,000 CUBIC FEET PER HOUR
MATERIAL: PRIMARY TANK - 1/4" THICK
SECONDARY TANK - 3/16" THICK

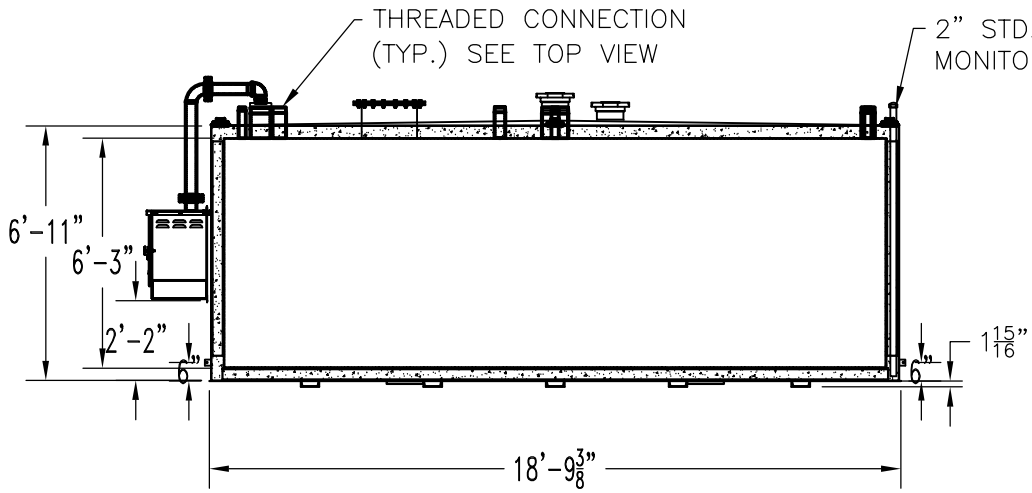

ELEVATION

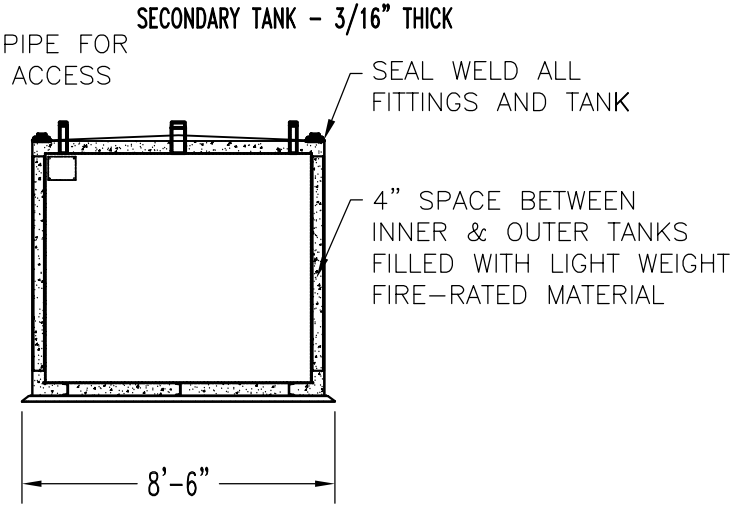

END VIEW

PRODUCT CODE	GALLONS	DESCRIPTION	OVERALL SIZE	SHIP WT.
V4AA106MVS546	6,000	U/L-2085 ABOVE GROUND VAULT TANK	18'-8" L X 7'-11" W X 7'-1" H	27,400 LBS.

THIS DRAWING AND DESIGN SHOWN HEREIN IS THE PROPERTY OF CONTAINMENT SOLUTIONS. USE OR COPIES THEREOF CANNOT BE MADE WITHOUT WRITTEN CONSENT.

CUSTOMER NAME

APPROVED BY: _____ DATE: _____

CONTAINMENT SOLUTIONS®

DRAWN BY: D. ROVANG	DATE DRAWN: 04-30-08
DWG NUMBER: 5103274	SCALE: 1:64
REV:D REV BY:DAR DATE: 01-01-14	SHEET:1 OF 1