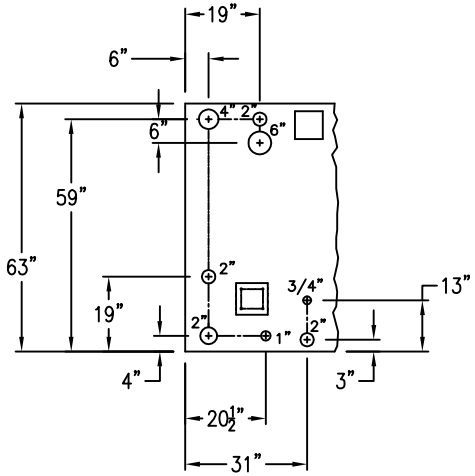

TOP OPENINGS LAYOUT

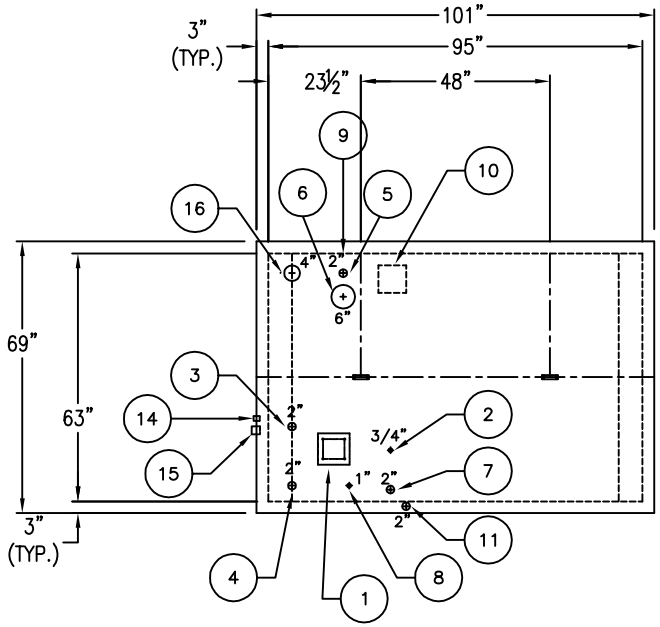

TOP VIEW

PART LIST(1,000 GALLON SAFE-WASTE)		
FIND#	DESCRIPTION	QTY.
1	PUMP MOUNT ANGLES	4
2	3/4" OPENING FOR PRODUCT DISCHARGE	1
3	2" AUTOMATIC AIR OPERATED HIGH LEVEL SHUT-OFF VALVE WITH WHISTLE FOR DIAPHRAGM PUMP	1
4	2" SUCTION TUBE WITH KAMLOCK AND DUSTCAP FOR PRODUCT WITHDRAWAL	1
5	2" PRIMARY WORKING VENT	1
6	6" PRIMARY EMERGENCY VENT	1
7	2" PRODUCT LEVEL GAUGE	1
8	1" OPENING FOR SAMPLING	1
9	3 1/8" HOLE FOR VENT PIPE	1
10	U/L LABEL	1
11	ANNULAR SPACE MONITORING	1
12	18" X 34" CABINET ACCESS DOOR	1
13	PLEXIGLASS VIEW PORT	1
14	1/2" FULL COUPLING FOR AIR SUPPLY HOSE	1
15	3/4" FULL COUPLING FOR PRODUCT SUCTION	1
16	4" SPARE WITH PVC PLUG	1

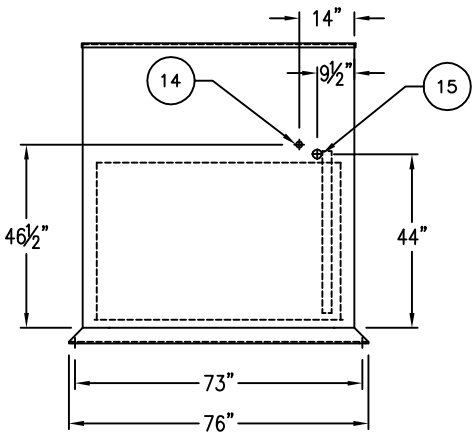

LEFT END VIEW

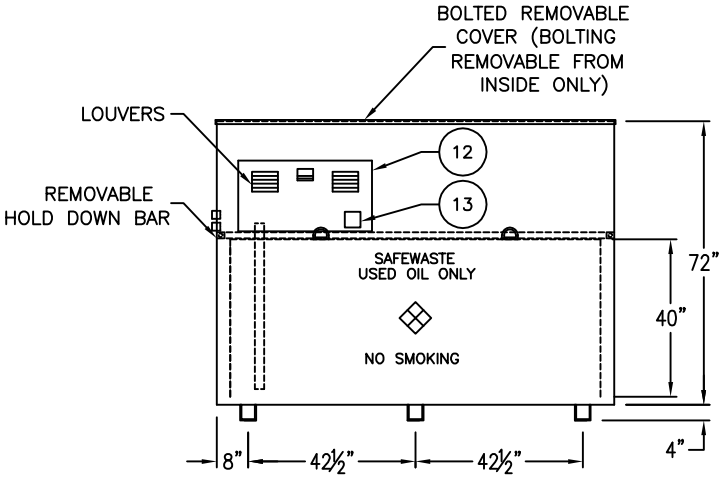

ELEVATION

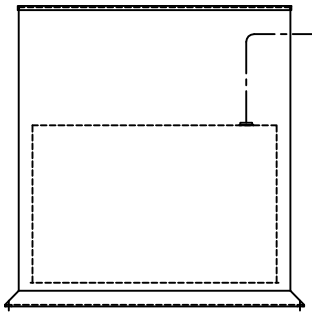

RIGHT END VIEW

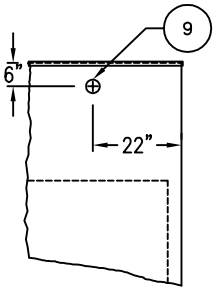

BACK VIEW

NOTE:
ALL INTERNAL PIPING TO BE DONE IN SHOP

*SEE ORDER ENTRY FOR PAINT & EQUIPMENT

PRODUCT CODE	GALLONS	DESCRIPTION	OVERALL SIZE	SHIP WT.
SWAA101MDS000	1,000	UL-142 SAFE WASTE	8'5"L X 5'9"W X 6'4"H	3,000 LBS

THIS DRAWING AND DESIGN SHOWN HEREIN IS THE PROPERTY OF CONTAINMENT SOLUTIONS. USE OR COPIES THEREOF CANNOT BE MADE WITHOUT WRITTEN CONSENT.

CUSTOMER NAME

APPROVED BY: _____ DATE: _____

CONTAINMENT SOLUTIONS®

DRAWN BY: R.P.H.		DATE DRAWN: 01-01-14	
DWG NUMBER: 100213		SCALE: SALES	
REV:	REV BY:	DATE: 08-18-08	SHEET: 1 OF 1